Parts & Service Manual
for
Heavy Duty Benching Wing

Monroe Snow & Ice Control
1051 W. 7th Street • Monroe, WI 53566
USA: 877-834-9049 • Fax: 608-329-8488
www.monroetruck.com

05050755
11/18/2013

Table of Contents

General Information

- Use only Monroe Truck Equipment O.E.M. replacement parts. Failure to do so will void the warranty.
- Location descriptions are noted in direction of travel (i.e. front, rear, left and right).
- Delivery of replacement parts is subject to our sales delivery terms.
- Replacement parts listed in this manual reflect the most common items for this product. If you do not find the part you require, please call your distributor.
- Monroe Truck Equipment reserves the right to make revisions or alterations to the parts manual at any time.

How to Order Parts

To order or inquire about replacement parts, please contact the distributor or store that the product was purchased through. To speed the information flow, please have the following information available:

- Model Number
- Serial Number
- Part Number and/or Description of the Part
- Quantity Needed

For further information about Monroe Truck Equipment replacement parts, please call 877-834-9049.

Return Policy

Merchandise returned to Monroe Truck Equipment must have a Warranty Service Request (WSR) form filled out completely and signed by authorized personnel.

To get your WSR form for whole goods, call Snow & Ice Sales at 800-880-0109.

To get your WSR form for replacement parts, call Warranty at 877-834-9049..

All returned items are subject to a 15% restocking fee and ***must be sent freight pre-paid.***

Safety Instructions

Warning: **Before working under the vehicle or around the wing, lower the moldboard to the ground, shut off the truck engine and remove the key from the ignition. Prevent accidental startup and operation of the wing to avoid personal injury.**

Warning: **Accidental lowering of the wing when driving or when working around the vehicle may cause death, severe injury, and property damage. When the wing is not being used actively for clearing snow, raise it all the way and connect the safety restraint chain(s) that prevent lowering. Never transport the wing at highway speeds unless the wing is raised and chained up.**

- Locate and read all safety decals on the unit before operating the equipment. Familiarize yourself with all potential hazards in operating this equipment.
- Read all installation, operation, and maintenance instructions before operating the equipment.
- Keep all provided shields, covers, and guards in place during operation of the unit.
- Stay away from the wing when it is moving. Stay away from pinch points created by the moving wing components.
- Never work on or around the wing unless the vehicle is turned off and the ignition key is removed. Follow lock-out/tag procedures for working on hazardous equipment.
- Lower the wing to the ground before working on any of its components.
- When the wing is raised and not in use, always attach the safety restraint chains to prevent accidental and unexpected lowering of the wing.
- Be aware of the extra vehicle width created by the wing installation. Allow for the extra width when driving in traffic, passing parked vehicles, and entering buildings through overhead doors.
- When installing a new cutting edge, always “clip” the lower in-board corner of the edge to prevent the corner from catching on the pavement if the wing toe is set too low. If the square corner of a cutting edge catches the pavement, the wing can be thrown up and into the side of the vehicle cab, causing serious damage.
- Watch for hydraulic fluid leaks at fittings and hoses. High-pressure fluid leaks can penetrate skin and cause severe injury.

- Do not climb or walk on the wing or its mounting components, especially when the unit is wet or icy.
- If the wing needs repair or the controls are not functioning properly, repair the unit immediately. Do not continue to operate a malfunctioning unit—further and more serious damage may occur.
- Do not disassemble spring-loaded components such as trip edges and push arms unless you have the correct tools and are trained in these tasks. Pre-loaded springs are under extreme compression and can cause severe injury if the spring force is released suddenly and unexpectedly.
- If the wing accidentally impacts an object during use, stop immediately and inspect all components. Look for bent and broken components. Do not continue to operate with a severely damaged wing.
- When removing and storing a wing for summer, locate it away from high traffic areas and block it securely so it cannot fall or be pushed over.

Welding Guidelines

- Structural welds may be defined by a Weld Procedure Specification (WPS) document. Where applicable, this document will be included in the installation instructions for Snow & Ice products. Where a WPS is provided, welds are to be performed following the specifications and instructions on the WPS.
- Where a WPS applies, the person performing the welding should be qualified (tested) to the procedure on the WPS. This is to verify that the person can success fully perform the required weld.
- If a WPS is not provided, follow the general guidelines given below.
- For stick (rod) welding (SMAW) use low-hydrogen rods such as AWS A5.1, E7018. Welding rods must be stored in accordance with AWS D1.1, Section 5.3.2.1 to prevent absorption of moisture and other contaminants.
- For wire (gas shield) welding (GMAW) use AWS A5.18, ER70S-6, F6 wire. Wire diameter must be 0.035” or 0.045 as dictated by the size of the weld or as indicated on the applicable WPS.

- All welds must have adequate penetration and fillet size to obtain maximum strength of the weld. Cold lap welds and undercutting are not acceptable. Unacceptable welds must be ground out and re-welded. Typically, 3/8" weld fillets are required, unless a WPS states differently.
- Verify that the welding machine being used is working properly and that the volt/amp gauges are accurate when making settings based on a WPS.
- Components to be welded must be clean and dry at the weld area, with paint, rust, and oil removed.
- Unless otherwise directed on a WPS, all parts to be welded must be at least 50° F before welding is performed.
- When welding cast parts such as pipe brace balls, the parts must be heated to 150° F for several minutes to drive out any moisture.
- When welding to large parts that will act as a heat sink, pre-heating of the weld area may be required to insure equal penetration on both parts. Refer to the applicable WPS or to AWS guidelines if available. Before heating parts, check for wiring, hoses, and other components that could be damaged by the heat. Remove or move these components before applying heat to the area.
- Disconnect all battery cables (both positive and ground) before welding to help prevent damage to electronic components on the chassis.
- Always be sure the welder has a good ground contact as close to the weld point as possible. Remove dirt, paint, and grease from the area where the ground will be connected. This will help prevent damage to electronic components on the chassis.
- Never "quench" hot welds or otherwise accelerate cooling. Allow all welds to cool in still air.
- Welding on MTE products for any reason other than instructed installation procedures is prohibited and may void the warranty on the product.
- Never cut, weld, or grind directly on a chassis frame. Do not drill additional holes though a chassis frame unless directed to do so in the installation instructions.
- This information applies only to products and installation instructions where welding is instructed and allowed. Use of welding where threaded fasteners are indicated in the installation instructions may void the warranty on the product and/or the OEM chassis components.

Maintenance Instructions

In Season:

Warning: **Before working under the vehicle or around the wing, lower the moldboard to the ground, shut off the truck engine, and remove the keys from the ignition. Prevent accidental startup and operation of the wing to avoid personal injury.**

Warning: **Accidental lowering of the wing when driving or when working around the vehicle may cause death, severe injury, and property damage. When the wing is not being used actively for clearing snow, raise it all the way and connect the safety restraint chain(s) that prevent lowering. Never transport the wing at highway speeds unless the wing is raised and chained up.**

- Re-torque all fasteners after the first 8 hours of use.
- Check for loose, damaged, and missing fasteners before each use.
- Inspect and re-torque all fasteners at the beginning of each plowing season.
- Lubricate grease fittings every 10 hours during normal use and more often during heavy use.
- For open slides on wing posts, apply a coating of grease as required.
- Tighten all hydraulic fittings after the first 8 hours of use.
- Inspect hydraulic fittings for leaks every week and tighten as required. If a hydraulic fitting continues to leak after being tightened, replace the fitting as soon as possible.
- Check the cutting edge for wear after each use. Replace the cutting edge when it wears to within ½" of the moldboard.
- When installing a new cutting edge, "clip" the lower in-board corner as directed in this instruction manual to prevent catching on pavement.
- Check the operation of the wing before each use.
  - Verify that the wing has full up and down travel. Check all functions: heel, toe, raise/lower, and benching function (if applicable).
  - Investigate the cause of any binding or sticking in the wing travel or the failure of the wing to raise or lower fully.
  - If the hydraulic valves are operated by cables, verify that the lever(s) and cables operate smoothly and easily, and that the levers snap back to center when released.
- Inspect the hydraulic hoses and any electrical wiring for wear or damage every month. Check hoses and wiring attached to moving components closely.
- At the end of each storm event, pressure-wash the wing and its components, especially any horizontal surfaces that can hold road salt and other corrosive chemicals. Removing salt and other chemicals regularly will prolong the life of all components.

In Season (Continued):

- Due to the harsh operating conditions of a wing, regular inspection and maintenance is critical to safe operation and durability of the wing. The owner or end user of the wing must create and enforce the use of an inspection and maintenance schedule.
- If the wing is subjected to serious impact against another object, inspect it closely for bent or broken parts.

Off Season:

- At the end of the plowing season, the wing moldboard should be removed. For some installations, the mounting brackets and cross tube(s) may also be removed.
- Inspect the moldboard and the mounting components on the truck before removal. Make any required repairs immediately so that the wing is ready to be reinstalled and used at the start of the next winter season.
- Before disconnecting any hydraulic hoses, lower the wing to the ground. If the wing lowers unexpectedly, it can cause severe injury to feet and hands.
- When quick-disconnects are separated, cover and cap the ends to prevent the entry of contaminants into the hydraulic system and possible impact damage to the ends.
- If there are no quick disconnects and hoses are removed from fittings, cap or plug all open hydraulic fittings.
- The exposed areas on hydraulic cylinder rams should be covered with grease during the storage period. Remove the grease before returning the wing to service.
- If possible, store the wing and components indoors to reduce rusting and UV damage to hoses.
- Keep all loose parts with the wing so they are readily available for re-installation.
- When reinstalling the wing, replace any damaged fasteners and follow the fastener torqueing guidelines for in-season use.

Torque Chart

SIZE	GRADE 2	GRADE 5	GRADE 8
1/4-20	50 IN-LBS	75 IN-LBS	9 FT-LBS
3/8-16	15 FT-LBS	23 FT-LBS	35 FT-LBS
1/2-13	35 FT-LBS	55 FT-LBS	80 FT-LBS
5/8-11	75 FT-LBS	110 FT-LBS	170 FT-LBS
3/4-10	130 FT-LBS	200 FT-LBS	280 FT-LBS
1-8	190 FT-LBS	480 FT-LBS	680 FT-LBS
1 1/4-7	380 FT-LBS	840 FT-LBS	1,360 FT-LBS

Installation Instructions

These mounting instructions are intended as a guide to aid you in the installation of your Monroe Heavy Duty Benching Wing. All dimensions noted in the instructions are approximate and may vary due to: make and model of chassis, tire size, type of suspension, spring deflection, customer preference, and interference caused by immovable attachments. Ideally, the wing should be mounted to get full usage of the cutting edge without wearing into the moldboard. Monroe Truck Equipment assumes no responsibility for improper installation, unless installed at a Monroe Truck Equipment location. Mounting location should be discussed by the end-user and the installer prior to installation in order to achieve the best possible installation.

SIDE PLATE INSTALLATION

1. Clamp side plates to the truck frame as shown. Keep the plates square and level to the truck frame not the ground.
2. Drill (12) 21/32" diameter holes through each side plate and the truck frame. Apply paint or rust inhibitor to drilled holes.
3. Fasten each side plate with 5/8" bolts/nuts and hardened washers. Tighten bolts to specifications. If there is any excess length in the truck frame, it can be trimmed with a cutting torch, if needed.

Figure A.

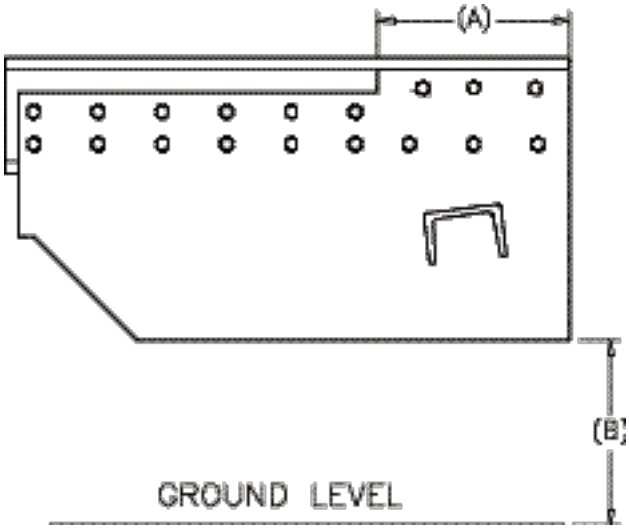

WING POST INSTALLATION

1. The lift cylinder on the wing post should be fully collapsed. Apply anti-seize lubricant to the pin that holds the cylinder in place.
2. Insert the wing mounting bolt (1½" x 9") into the lower hole of the mounting block. Apply anti-seize lubricant to the mounting bolt.
3. Connect the mounting block assembly to the wing post slider using the 1½" x 18¼" pin provided with the post assembly. Tighten the ¼" bolt/lock nut to hold the pin in place.
4. Measure the wing moldboard assembly from the bottom edge of the cutting edge mounting angle to the center of the pivot hole. This amount will be the distance from the ground to the center of the 1½" mounting bolt on the mounting block assembly. (Measurement C,below). This would be grade level. Note: Check with user if wing moldboard should be installed, below grade, at grade or above grade. (Caution: Suspension Spring deflection may occur.)
5. Lift the wing post to the correct height with a proper lifting device. Rotating the wing post 7°, the top leaning rear of truck.
6. Scribe the side plate around the cross channel (7 x 22.7 x 81). Double-check the measurement before cutting side plate to receive channel. Gussets may be added to strengthen this connection. Remove the assembly and weld completely. NOTE- Be sure the surfaces being welded are cleaned of paint, grease or dirt.
   IMPORTANT - DO NOT ATTACH PIPE BRACES AT THIS POINT.

Figure B.

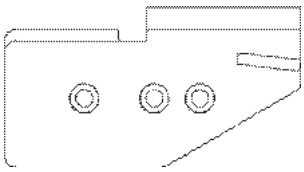

Banjo Plate Assy, RH

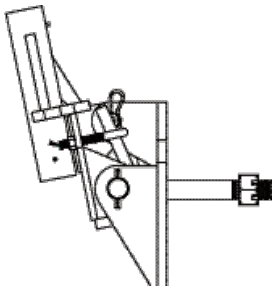

Heavy Duty Full Trip Mounting Block

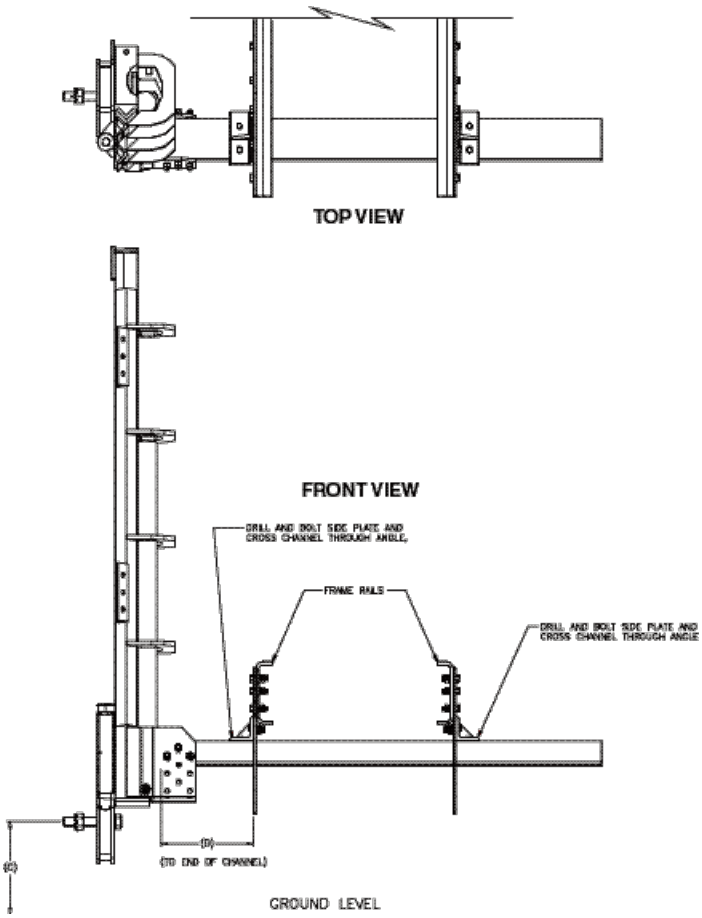

REAR MOUNT INSTALLATION

1. Refer to the diagram and determine where the rear mount will be installed. Placement may vary due to the location of the exhaust pipe or other components already on the truck. Some of the components may need to be moved to create space for the rear mount.
2. Set the rear mount on the truck frame and clamp it in place. If bolts or rivets were removed from the frame, transfer the hole locations to the rear mount and drill so the bolts can be returned to the same holes. If no bolts were removed, drill where best suited.
3. With the rear mount in the correct position, attach a ½″ x 4″ x 4″ x 9″ angle (not included) as shown in the diagram. Drill (3) 11⁄16″ holes through the mounting angle and the truck frame. Fasten with ⅝″ bolts/top lock nuts and hardened washers. Weld the other side of the angle to the rear mount.

Figure C.

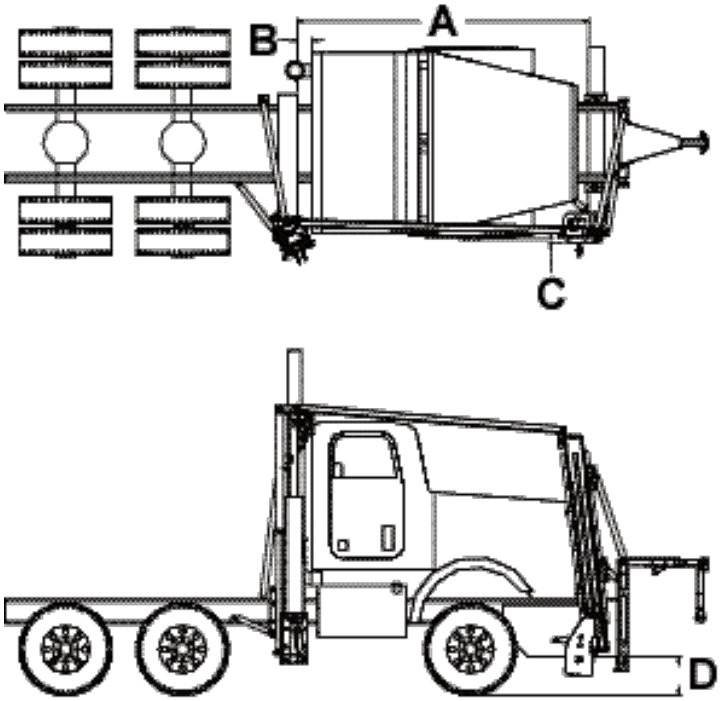

ALLOW 2.000 MINIMUM CLEARANCE BETWEEN WIDEST POINT OF TRUCK CAB OR TIRE AND MOLDBOARD MOUNTING BLOCK. WITH WING IN UP POSTION TURN WHEELS HARD RIGHT TO CHECK CLEARANCE.

A = 130″
B = 7″
C = 2″ Minimum
D = 11″ Minimum

Measurements are approximate and may vary.

Figure D.

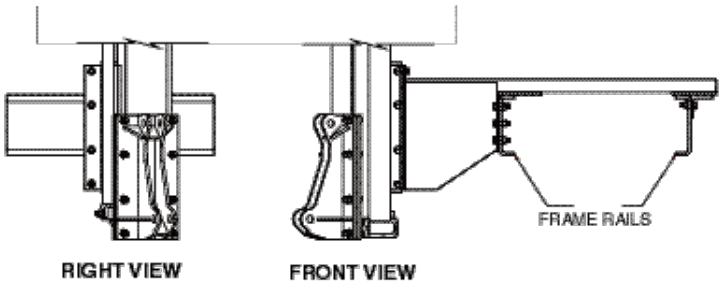

MOLDBOARD INSTALLATION

1. Connect the moldboard to the mounting block on the front post. The 1½″ mounting bolt should already be in the mounting block. Lift the moldboard with a proper lifting device and line up the pivot hole with the mounting bolt. Secure the moldboard with a 1½″ washer and slotted nut. Tighten the nut just until snug to allow the moldboard to pivot. Secure the nut with a 3⁄16″ x 2″ cotter pin. A lubricant is recommended between moldboard and mounting block.
2. Connect the lower pusharm bracket (and upper bracket if upper pusharm is being installed) to the moldboard with (3) ⅝″ x 2½ bolts and top lock nuts. Placement of the pusharm mount will vary. A 90° angle between pusharm and moldboard is best.
3. Connect the push arm to the rear mount and the wing moldboard using the pins provided with the push arm assembly.
4. Plumb the system according to the diagram.
5. Start the truck engine and raise the moldboard to the stored position. Lift slowly to avoid hitting cab or mirrors. Turn the truck wheels all the way to the right and check the clearance between the tire and the moldboard. There must be approximately 2″ of clearance.

NOTE- This is a critical step and must be performed prior to securing the front cross channel to the side plates.

PIPE BRACE INSTALLATION

1. Secure the cross channel to the guide angles/side plates as shown in Fig. B, Page 6.
2. Attach (2) pipe ball ends to the mounting angle and to the hitch. Attach (1) pipe ball end to the side plate. Try to get a 45° with the side plate to bottom of post and the side plate for standard application. Keep the ends in as straight a line as possible.
3. Measure the distance between the ball ends from center to center and cut the 2″ Sched 80″ pipe to that length. NOTE- Before measuring, be sure the wing post is in the operating
(retracted) position. Tack weld the pipes to the ball ends. Remove and weld completely (See page 12 for Welding Guidelines). Re-install and tighten the bolts.

Note: If power slide is required see section designated for Power Slide Installation.

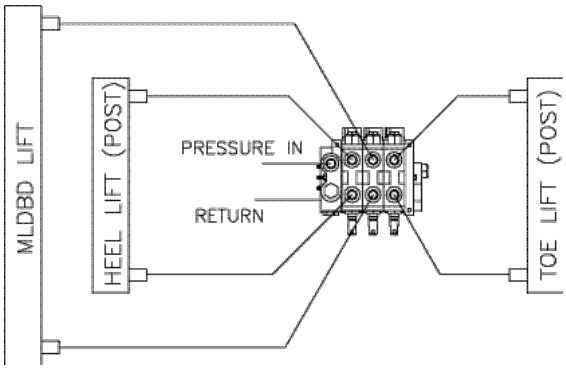

Figure E.

WING STOP AND SAFETY RESTRAINT CHAIN

1. With the wing in the raised position, weld the provided chain hook to the push arm. Find the correct position for the hook by extending the safety restraint chain that is provided from the post to the push arm. Tack weld first and check for a good fit.

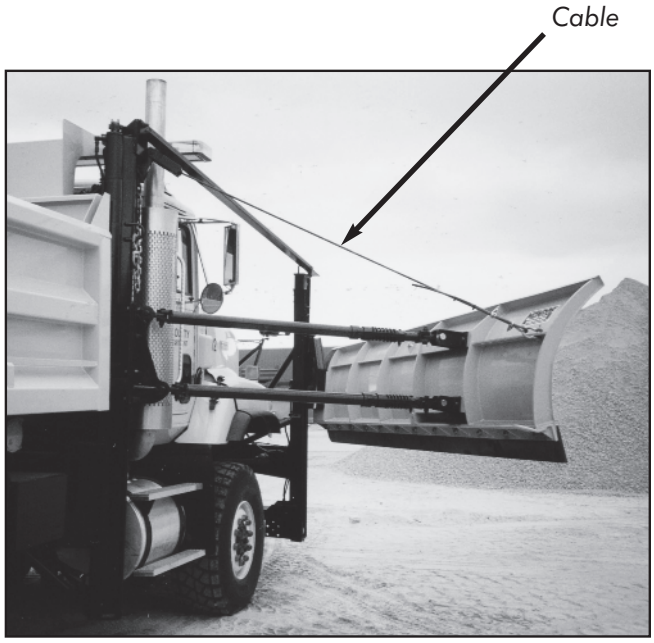

Figure F.

Figure G.

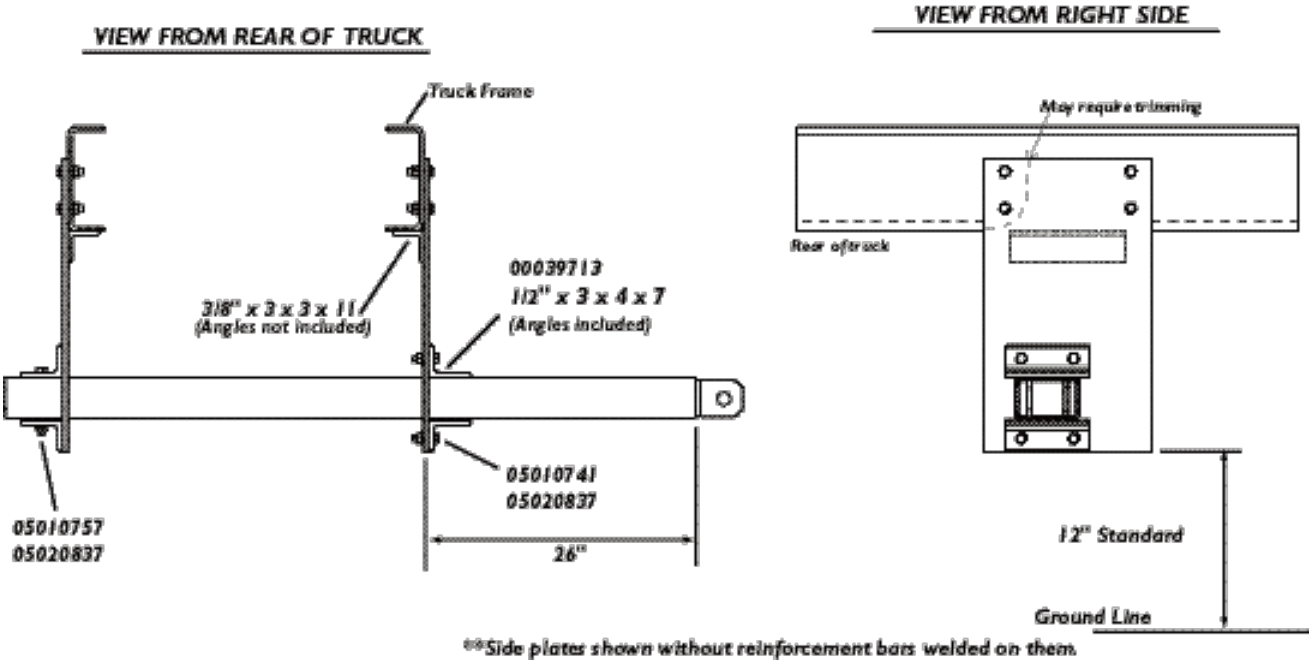

Figure H.

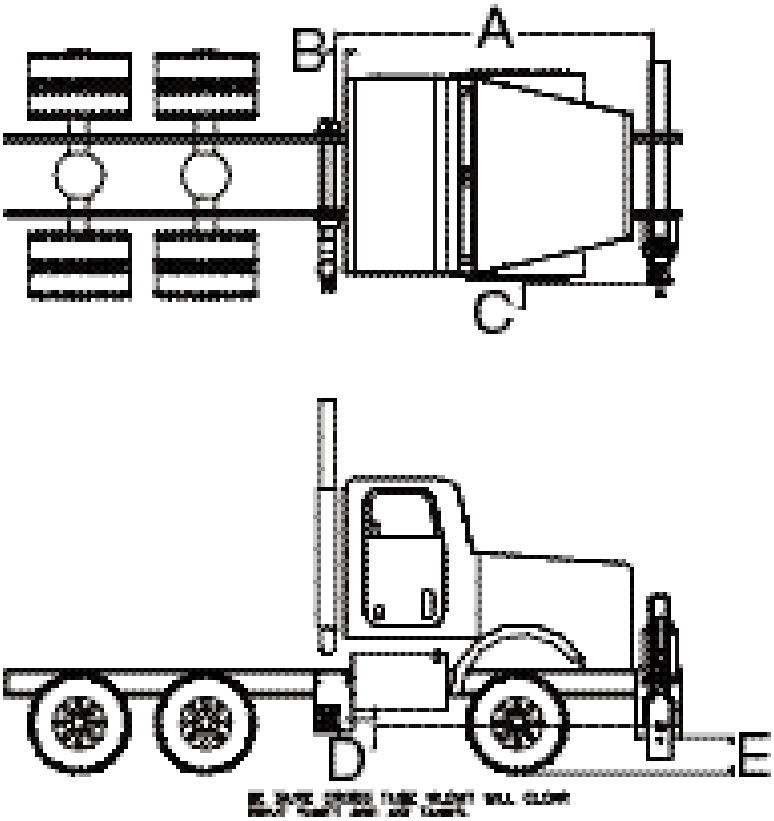

A = 130″
B = 4″
C = 2″ Minimum
D = 3″
E = 11″ Minimum

Measurements are approximate and may vary.

1. Complete the entire installation including hydraulic system and controls. Unit must be operational. Attach push arms to rear support (or slide) and mount the wing. Connect cylinder as shown in Fig.J.

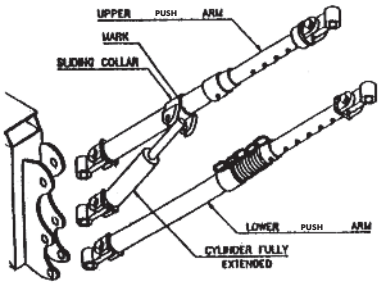

Fig. J

2. Using a chain falls or other suitable (and safe) lifting apparatus, raise the rear of the wing to it's folded position. Raise the front to a carrying position. Note- If the front of the wing is raised high for this set-up, the rear may fold too close after the set-up and strike the mirror or cab. A suitable height for set-up purposes would be to raise the front of the wing just above the bottom of the front mast.

3. Operate the arm cylinder to extend it to it's maximum length. With a welders pencil or paint, mark the upper arm at the outer end of the sliding collar. Fig. K

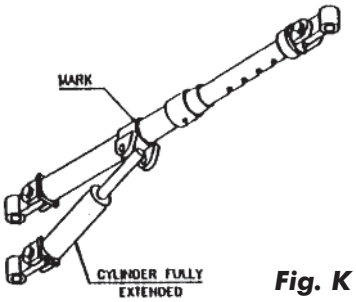

Fig. K

4. Lower the wing (front and rear) to the floor. **Retract the arm cylinder completely.** The outer split collar (for lifting) should be positioned one-half to three quarters of an inch inside (towards truck) the mark made in step 3. Weld the collar all around only on the side away from the sliding collar. Position other split collar 20" behind the back of the sliding collar and weld in the same manner.
Weld seams also. Fig. L

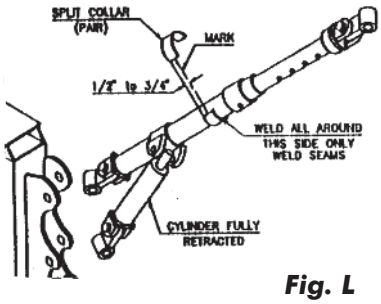

Fig. L

Installation Instructions

1. Lower the moldboard to the ground and disconnect the hydraulic hoses at the quick connect fittings.

2. Disconnect the heel cylinder from the mounting block. See Maintenance Instructions for off season care of cylinders.

3. Remove the push arm assembly from the rear mount and the moldboard. Return pins to push arm assembly.

4. Disconnect the moldboard from the mounting block. Return nut and washer to the mounting block.

5. Remove front post by disconnecting at cross tube or remove cross tube with post assembly.

6. Remove pipe braces and cross channel and return the bolts, nuts and pins to their proper locations.

7. Lubricating pivot points and repainting components will prolong life of wing kit.

8. Check condition of hydraulic hoses before returning to use. Replace if necessary

00035298 FRONT CROSS CHANNEL

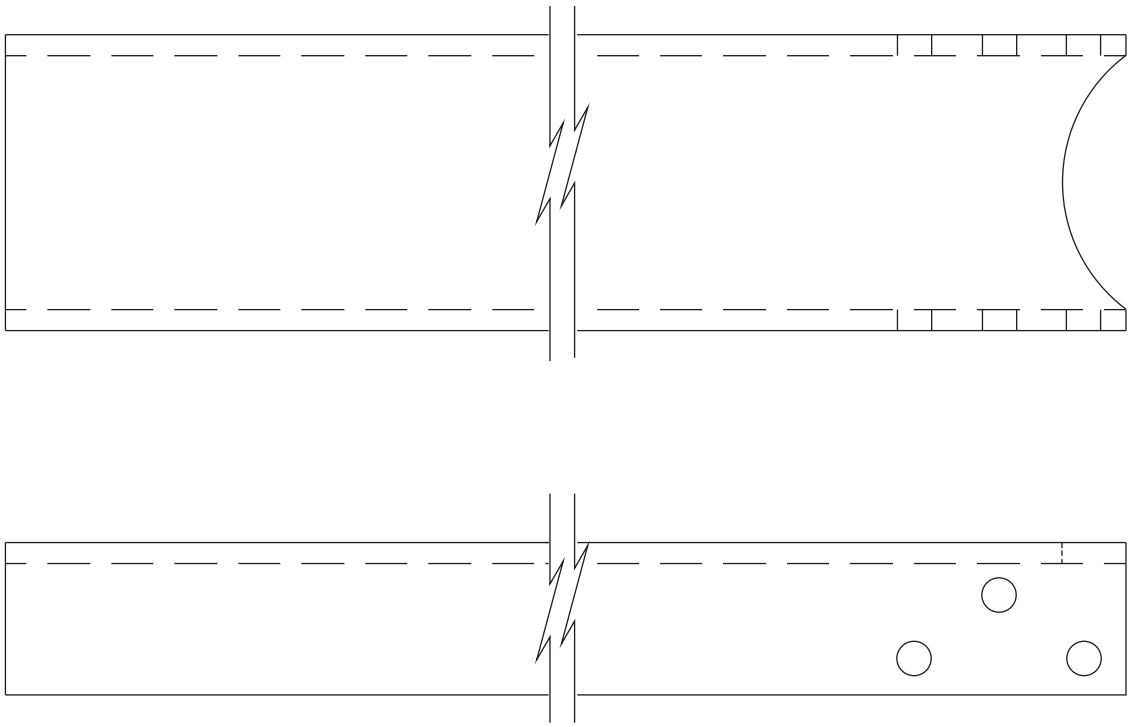

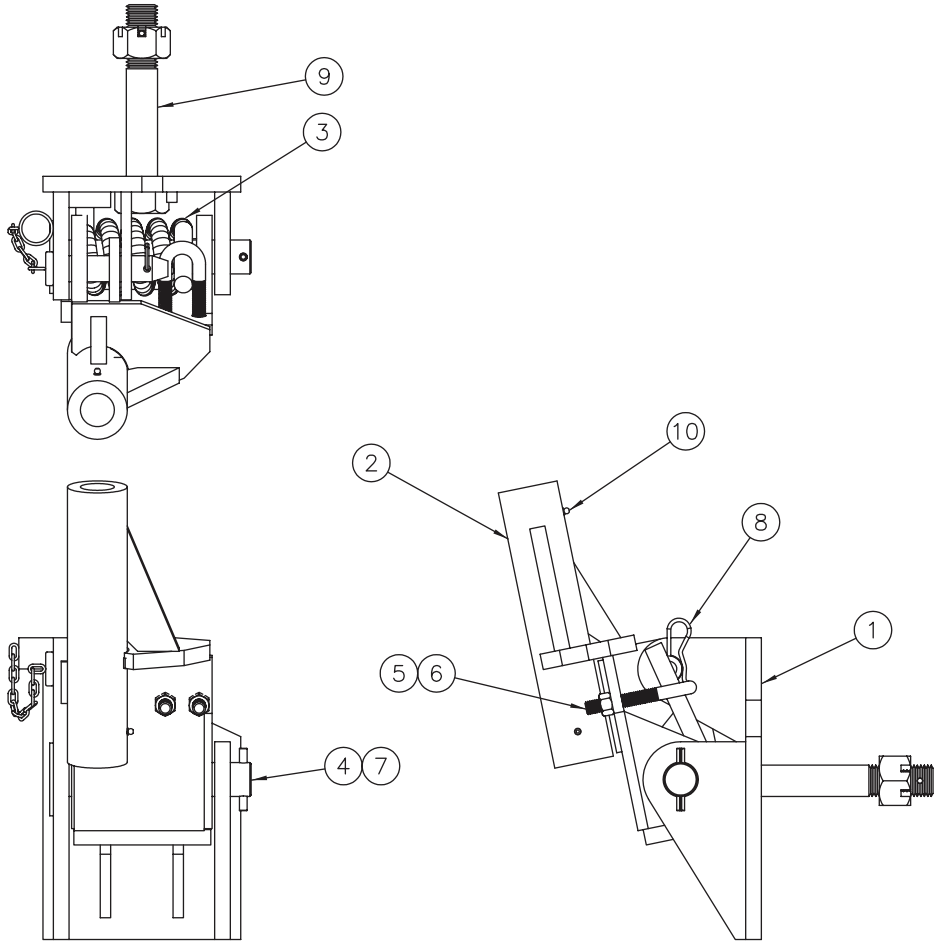

00031717 MOUNTING BLOCK ASSEMBLY, FULL TRIP, HEAVY DUTY			
ITEM	QTY	PART NUMBER	DESCRIPTION
1	1	00031714	PLOW PORTION WLDMT,HEAVY DUTY
2	1	01130690	MOUNT WLDMT,HALF,HD FULL TRIP
3	1	05035034	SPRING,TORSION,3.75OD,5.25OAL,.875 WIRE
4	1	01130685	PIVOT PIN WLDMT,FULL TRIP MTG BLOCK
5	1	01130692	U-BOLT,RND,.625-11,1.000x4.781,CRR
6	2	05020837	NUT .625-11 GC TOPLOCK C&W
7	1	05022049	PIN .375 x 3.00 ROLL ZC
8	1	05022002	PIN #8 .875"-1"PIN,.178 WIRE 3.750 LONG
9	1	01130620	BOLT 1.50-6 x 6.50 G8 HHCS ZC
10	2	05050288	GREASE ZERK,.250-28 STRAIGHT THREADED

FRONT WING POST ASSEMBLIES

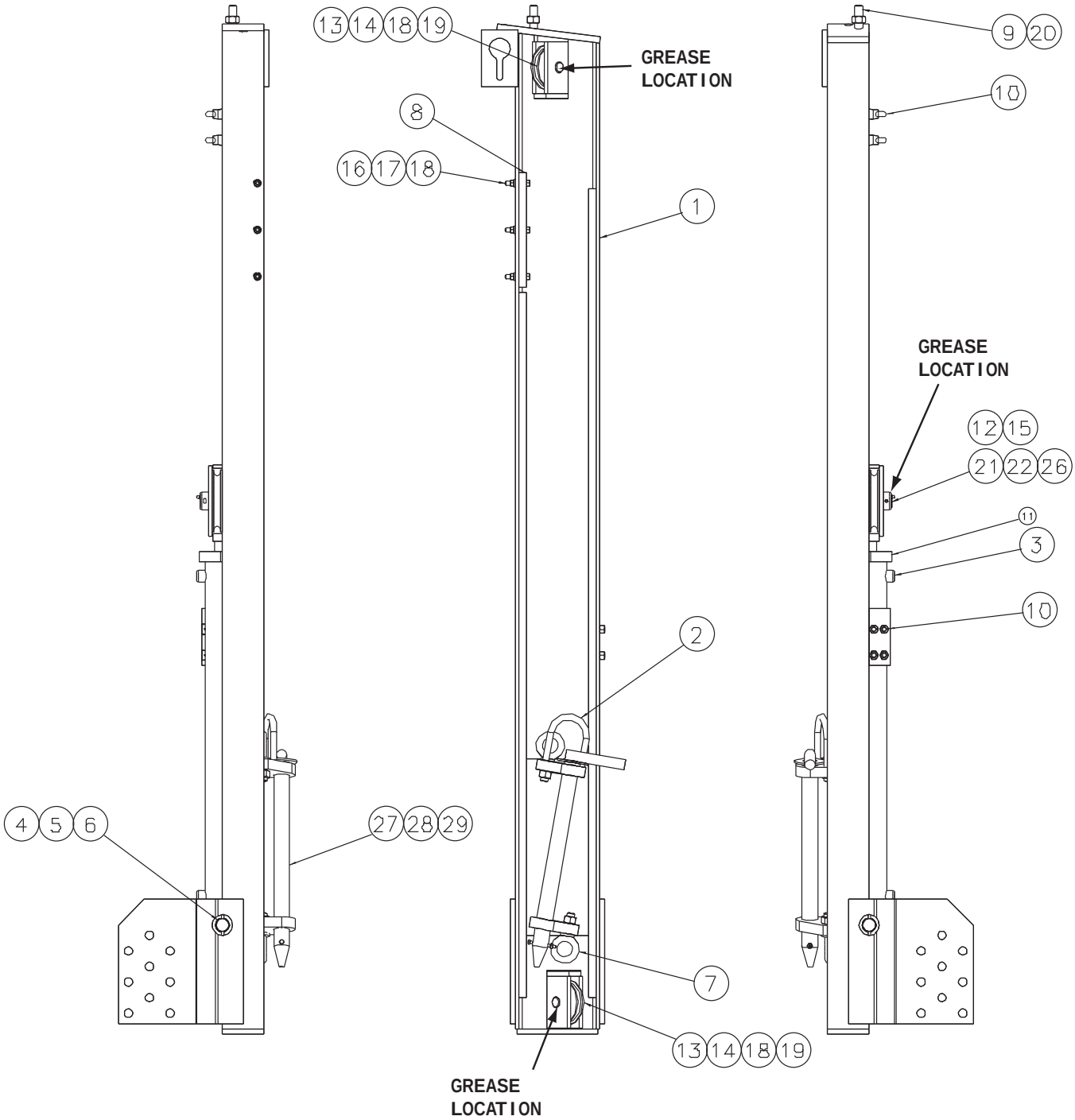

00027115 WING POST ASSEMBLY, RHFR, HDBW-C, 30, DF, CABLE			
ITEM	QTY	PART NUMBER	DESCRIPTION
1	1	01131500	WING POST WLDMT,RHFR,HDBW-C,DF
2	1	01131512	SLIDER WLDMT,RH,HDBW,DF,CABLE
3	1	05002310	CYLINDER,3x30,WING POST HD *See Page ???*
4	1	00083566	PIN 1.250 x 4.375,NO HEAD
5	2	05021316	WASHER 1.25 FLAT ZC
6	2	05022026	PIN .250 x 2.000 OA,ROLL
7	2	05016026	EYE BOLT
8	1	01131504	SLIDE ACCESS BAR
9	1	01131506	CABLE TENSION BOLT
10	8	05051000	CLAMP, CABLE, .50" FORGED STEE
11	1	01131514	CYLINDER STRAP
12	2	05034009	WPP60 PULLEY WITH BUSHING
13	2	05034008	PULLEY,4.5x1.0,BRONZE BUSHING
14	2	01131509	PULLEY PIN WLDMT
15	1	01131513	PULLEY PIN,CYLINDER
16	3	05010647	BOLT .375-16 x 2.00 G8 HHCS ZC
17	5	05020266	NUT .375-16 G8 HEX ZC
18	7	05021365	WASHER .375 LOCK ZC
19	2	05010641	BOLT .375-16 x .750 G8 HHCS ZC
20	1	05020271	NUT .750-10 G8 HEX ZC
21	1	05022031	PIN .188 x 2.500 COTTER
22	1	05050288	GREASE FITTING, .250-28 UNF ST
23	1	00027116	CABLE,GZ,.500x6/19x120.000
24	1	00027117	CABLE,GZ,.500x6/19x168.000
25	2	05050097	THIMBLE,CABLE,.500
26	2	05030040	BEARING,CAST BRZ 1.25x1.625x1"
27	1	00089809	PIN WLDMT,BANJO PL
28	1	05010599	BOLT .250-20 x 2.50 G8 HHCS ZC
29	1	05020910	NUT .250-20 G8 NYLON LOCK ZC

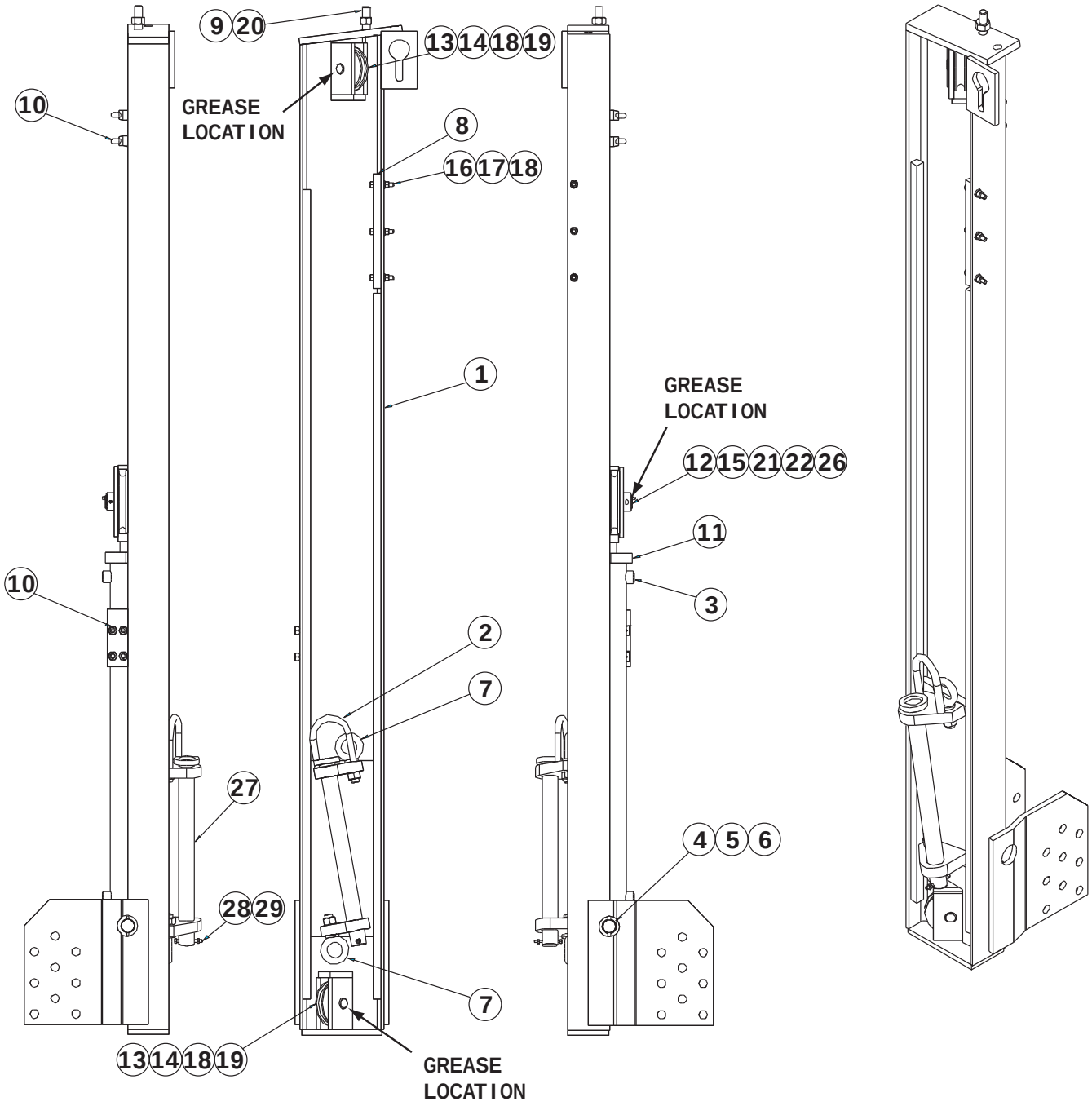
9 20
13 14 18 19
10
GREASE
LOCATION
8
16 17 18
1
GREASE
LOCATION
12 15 21 22 26
11
3
10
2
7
27
4 5 6
28 29
7
13 14 18 19
GREASE
LOCATION

00056799 WING POST ASSEMBLY, LHFR, HDBW-C, 30, DF, CABLE			
ITEM	QTY	PART NUMBER	DESCRIPTION
1	1	00057600	WING POST WLDMT,LHFR,HDBW-C
2	1	00057602	SLIDER WLDMT,LH,HDBW,DF,CABLE
3	1	05002310	CYLINDER,3x30,WING POST HD *See Page ???*
4	1	00083566	PIN 1.250 x 4.375,NO HEAD
5	2	05021316	WASHER 1.25 FLAT ZC
6	2	05022026	PIN .250 x 2.000 OA,ROLL
7	2	05016026	EYE BOLT
8	1	01131504	SLIDE ACCESS BAR
9	1	01131506	CABLE TENSION BOLT
10	8	05051000	CLAMP, CABLE, .50" FORGED STEE
11	1	01131514	CYLINDER STRAP
12	2	05034009	PULLEY,6.0"x1.375"W/BRONZE
13	2	05034008	PULLEY,4.5x1.0,BRONZE BUSHING
14	2	01131509	PULLEY PIN WLDMT
15	1	01131513	PULLEY PIN,CYLINDER
16	3	05010647	BOLT .375-16 x 2.00 G8 HHCS ZC
17	5	05020898	NUT .375-16 GC TOPLOCK C&W
18	7	05021365	WASHER .375 LOCK ZC
19	2	05010641	BOLT .375-16 x .750 G8 HHCS ZC
20	1	05020849	NUT .750-10 GC TOPLOCK C&W
21	1	05022005	PIN,COTTER .250 x 3.000 HITCH
22	1	05050288	GREASE FITTING, .250-28 UNF ST
23	1	00027116	CABLE,GZ,.500x6/19x120.000
24	1	00027117	CABLE,GZ,.500x6/19x168.000
25	2	05050097	THIMBLE,CABLE,.500
26	2	05030040	BEARING,CAST BRZ 1.25x1.625x1"
27	1	00089809	PIN WLDMT,BANJO PL
28	1	05010599	BOLT .250-20 x 2.50 G8 HHCS ZC
29	1	05020899	NUT .250-20 GC TOPLOCK C&W

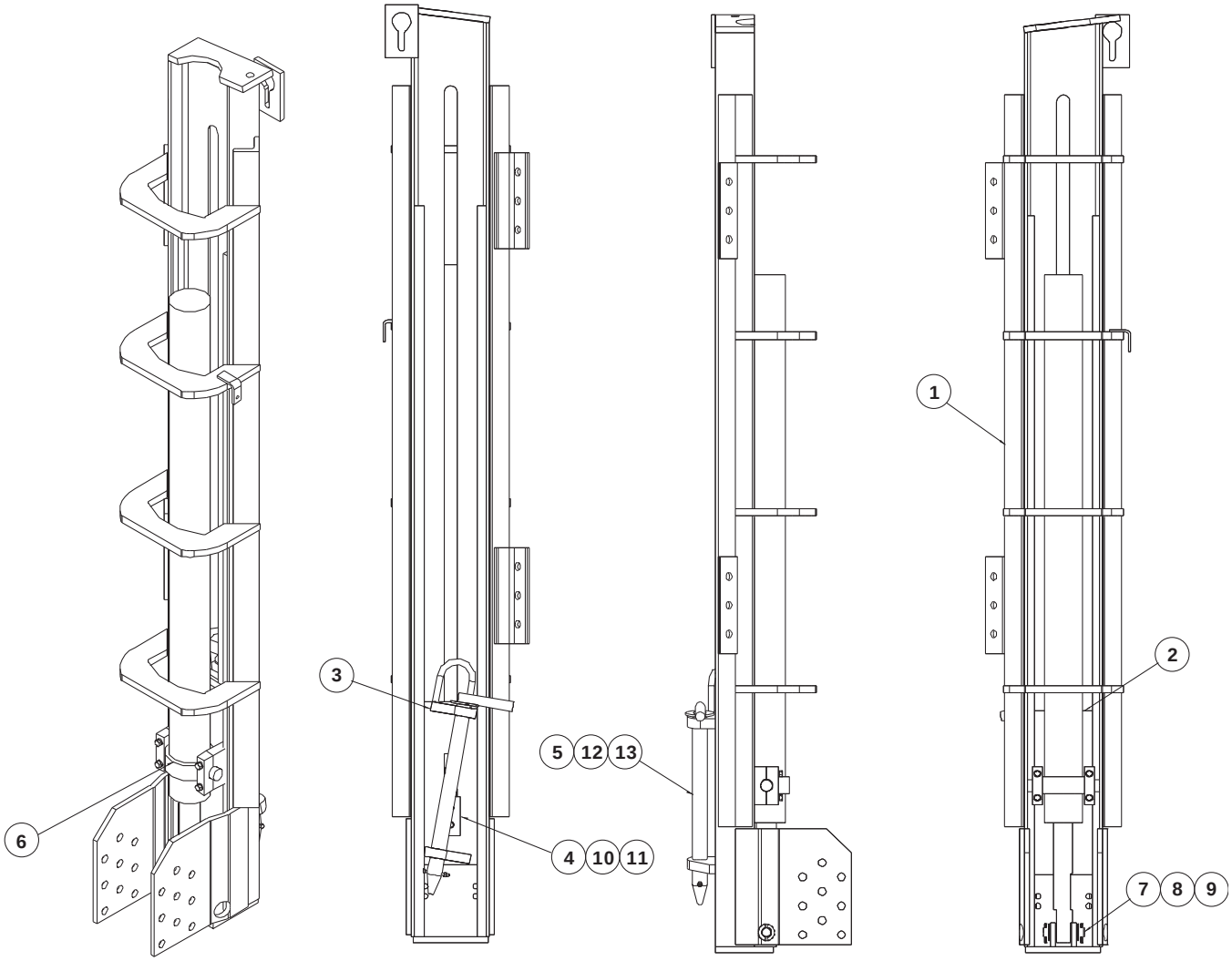
1
2
3
4
5
6
7
8
9
10
11
12
13

00035294 WING POST ASSEMBLY, RHFR, HDBW, 62, DF, DIRECT			
ITEM	QTY	PART NUMBER	DESCRIPTION
1	1	00010573	WING POST WLDMT,FR,HDBW
2	1	01131410	SLIDE ASSY,POST PORTION
3	1	01131416	SLIDER WLDMT,BENCHING WING,RH
4	1	01131415	SLIDE ATTACHMENT,WING POST
5	1	00089809	PIN WLDMT,BANJO PL
6	1	05002619	CYLINDER,3.5x62,DA,2ROD ***See Page ???***
7	1	05022040	PIN 1.00 x 4.25 NO HEAD,ZC
8	2	05021314	WASHER 1.00 FLAT ZC
9	2	05022026	PIN .250 x 2.000 ROLL ZC
10	2	05010645	BOLT .375-16 x 1.50 G8 HHCS ZC
11	2	05021365	WASHER .375 LOCK ZC
12	1	05010597	BOLT .250-20 x 2.00 G8 HHCS ZC
13	1	05020899	NUT .250-20 TOP LOCK ZC

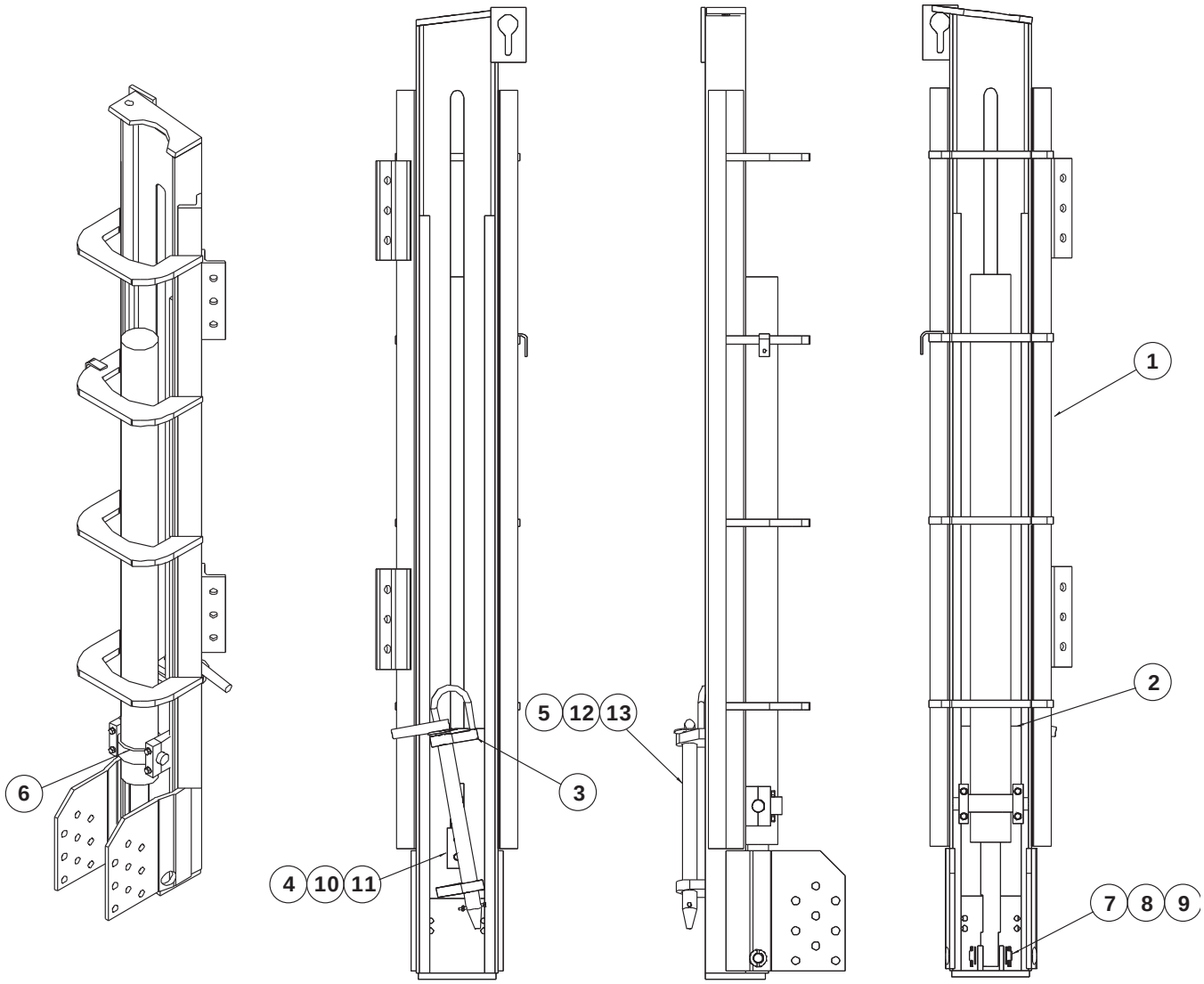
1
2
3
4
5
6
7
8
9
10
11
12
13

00057603 WING POST ASSEMBLY, LHFR, HDBW, 62, DF, DIRECT			
ITEM	QTY	PART NUMBER	DESCRIPTION
1	1	00057604	WING POST WLDMT,LHFR,HDBW,DF,DIRECT
2	1	01131410	SLIDE ASSY,POST PORTION
3	1	00057605	SLIDER WLDMT,LHFR,HDBW,DF,DIRECT
4	1	01131415	SLIDE ATTACHMENT,WING POST
5	1	00089809	PIN WLDMT,BANJO PL
6	1	05002619	CYLINDER,3.5x62,DA,2ROD ***See Page ???***
7	1	05022040	PIN 1.00 x 4.25 NO HEAD,ZC
8	2	05021314	WASHER 1.00 FLAT ZC
9	2	05022026	PIN .250 x 2.000 ROLL ZC
10	2	05010645	BOLT .375-16 x 1.50 G8 HHCS ZC
11	2	05021365	WASHER .375 LOCK ZC
12	1	05010622	BOLT .313-18 x 2.00 G8 HHCS ZC
13	1	05020909	NUT .313-18 GC TOPLOCK C&W

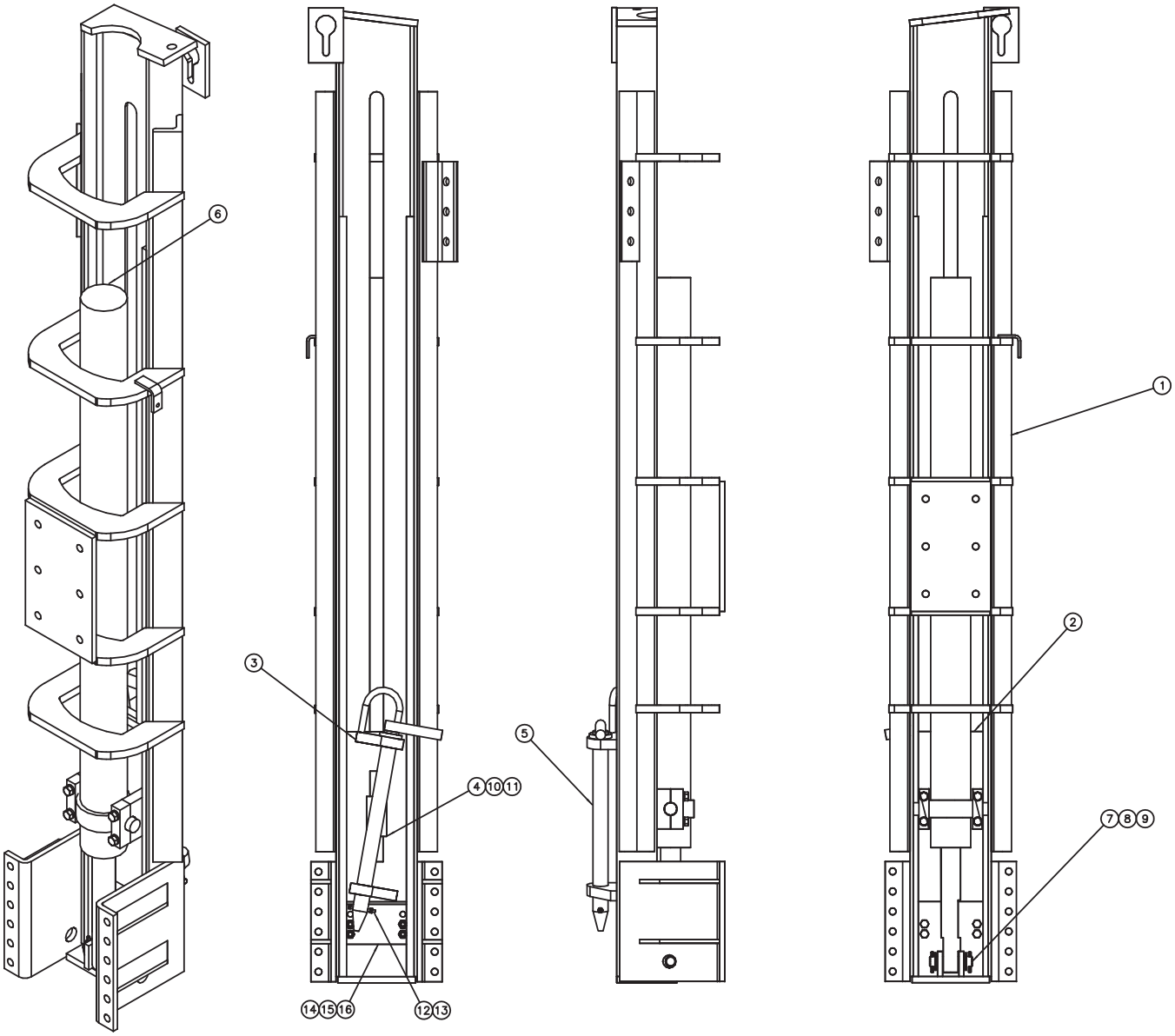
6
3
4 10 11
14 15 16
12 13
5
1
2
7 8 9

00114510 WING POST ASSEMBLY, RHFR, HDBW, 62.0 DF, DIRECT			
ITEM	QTY	PART NUMBER	DESCRIPTION
1	1	00114509	WING POST WLDMT,RHFR,HDBW,DIRECT
2	1	01131410	SLIDE WLDMT,POST PORTION,BENCHING WING
3	1	01131416	SLIDER WLDMT,BENCHING WING,RH
4	1	01131415	SLIDE ATTACHMENT,WING POST
5	1	00089809	PIN WLDMT,BANJO PL
6	1	05002619	CYLINDER,3.5x62,DA,2ROD,CRM,HDBW,FRONT
7	1	05022040	PIN,1.000 x 4.250,NO HEAD,ZC
8	2	05021314	WASHER 1.000 FLAT ZC
9	2	05022026	PIN .250 x 2.000 ROLL ZC
10	2	05010645	BOLT .375-16 x 1.500 G8 HHCS ZC
11	2	05021365	WASHER .375 LOCK ZC
12	1	05010597	BOLT .250-20 x 2.000 G8 HHCS ZC
13	1	05020899	NUT .250-20 GC TOPLOCK C&W
14	1	00046330	SLIDER STOP,FRONT,BENCHING
15	4	05010691	BOLT .500-13 x 1.500 G8 HHCS ZC
16	4	05020847	NUT .500-13 GC TOPLOCK C&W

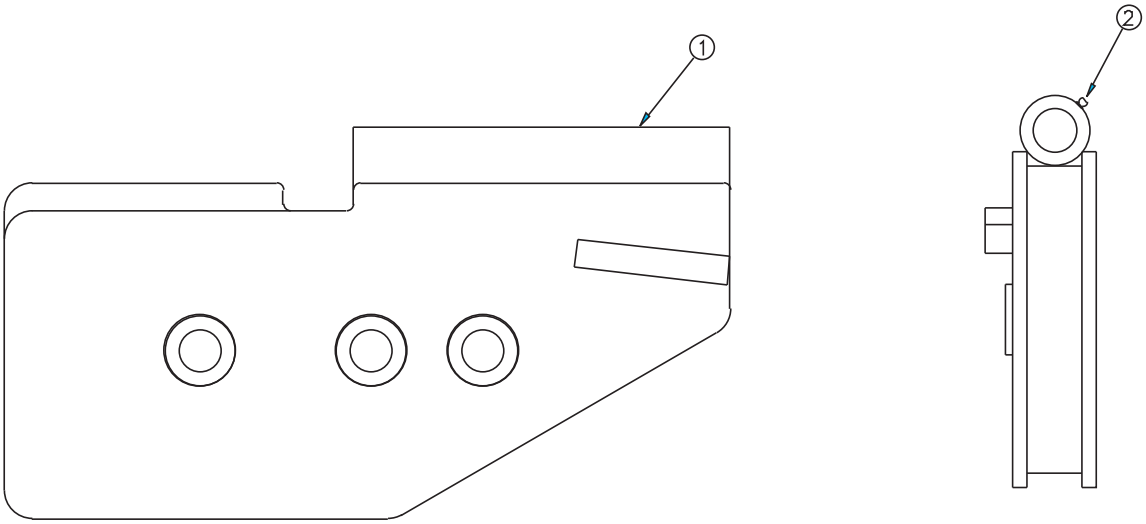

00033127 BANJO PLATE ASSEMBLY, RH 00012555 BANJO PLATE ASSEMBLY, LH			
Item	**Qty.**	**Part Number**	**Description**
1	1	01131420 00045376	BANJO PLATE WELDMENT, RH BANJO PLATE WELDMENT, LH
2	1	05050288	GREASE ZERK, .250-28, STRAIGHT, THREADED

WING MOLDBOARD ASSEMBLIES

MOLDBOARD ASSEMBLY, HDBW (USED ON NON TRIP AND FULL TRIP WINGS)			
ITEM	QTY	PART NUMBER	DESCRIPTION
1	1	00028872	MOLDBOARD WELDMENT, 9HDBW
		00028873	MOLDBOARD WELDMENT, 10HDBW
		00028874	MOLDBOARD WELDMENT, 11HDBW
		00028875	MOLDBOARD WELDMENT, 12HDBW
		00049708	MOLDBOARD WELDMENT, 9HDBW-L
		00049709	MOLDBOARD WELDMENT, 10HDBW-L
		00049710	MOLDBOARD WELDMENT, 11HDBW-L
		00049711	MOLDBOARD WELDMENT, 12HDBW-L
2	1	05050095	TAG, SERIAL NUMBER
3	1	00055962	DECAL KIT, PLOW ***\See Page ???***
4	1	***See Page ???***	CUTTING EDGE KIT

MOLDBOARD ASSEMBLY, HDBW, TRIP EDGE			
ITEM	QTY	PART NUMBER	DESCRIPTION
1	1	00077902	MOLDBOARD SUB ASSEMBLY, 9HDBW-TE
		00077903	MOLDBOARD SUB ASSEMBLY, 10HDBW-TE
		00077904	MOLDBOARD SUB ASSEMBLY, 11HDBW-TE
		00077905	MOLDBOARD SUB ASSEMBLY, 12HDBW-TE
		00077906	MOLDBOARD SUB ASSEMBLY, 9HDBW-TE-L
		00077907	MOLDBOARD SUB ASSEMBLY, 10HDBW-TE-L
		00077908	MOLDBOARD SUB ASSEMBLY, 11HDBW-TE-L
		00077909	MOLDBOARD SUB ASSEMBLY, 12HDBW-TE-L
2	1	05050095	TAG, SERIAL NUMBER
3	1	00055962	DECAL KIT, PLOW ***\See Page ???***
4	1	***See Page ???***	CUTTING EDGE KIT

MOLDBOARD SUB ASSEMBLY, 9HDBW-TE & 9HDBW-TE-L

Item	Qty.	Part Number	Description
1	1	00038800 00049723	MOLDBOARD WELDMENT, WING, 9HDBW-TE MOLDBOARD WELDMENT, WING, 9HDBW-TE-L
2	1	00035232	TRIP EDGE SECTION, 4’
3	1	00037115	TRIP EDGE SECTION, 5’
4	1	00035230	PIVOT ROD WELDMENT, 46.625 LG
5	1	00037116	PIVOT ROD WELDMENT, 58.625 LG
6	2	05022039	PIN, .313 X 2 OA, ROLL

MOLDBOARD SUB ASSEMBLY, 10HDBW-TE & 10HDBW-TE-L

Item	Qty.	Part Number	Description
1	1	00038801 00049724	MOLDBOARD WELDMENT, WING, 10HDBW-TE MOLDBOARD WELDMENT, WING, 10HDBW-TE-L
2	2	00037115	TRIP EDGE SECTION, 5’
3	2	00037116	PIVOT ROD WELDMENT, 58.625 LG
4	2	05022039	PIN, .313 X 2 OA, ROLL

MOLDBOARD SUB ASSEMBLY, 11HDBW-TE & 11HDBW-TE-L

Item	Qty.	Part Number	Description
1	1	00038802 00049725	MOLDBOARD WELDMENT, WING, 11HDBW-TE MOLDBOARD WELDMENT, WING, 11HDBW-TE-L
2	1	00037115	TRIP EDGE SECTION, 5’
3	1	00038163	TRIP EDGE SECTION, 6’
4	1	00037116	PIVOT ROD WELDMENT, 58.625 LG
5	1	00038164	PIVOT ROD WELDMENT, 70.625 LG
6	2	05022039	PIN, .313 X 2 OA, ROLL

MOLDBOARD SUB ASSEMBLY, 12HDBW-TE & 12HDBW-TE-L

Item	Qty.	Part Number	Description
1	1	00038803 00049726	MOLDBOARD WELDMENT, WING, 12HDBW-TE MOLDBOARD WELDMENT, WING, 12HDBW-TE-L
2	1	00038163	TRIP EDGE SECTION, 6’, RH
3	1	00038166	TRIP EDGE SECTION, 6, LH’
4	2	00038164	PIVOT ROD WELDMENT, 70.625 LG
5	2	05022039	PIN, .313 X 2 OA, ROLL

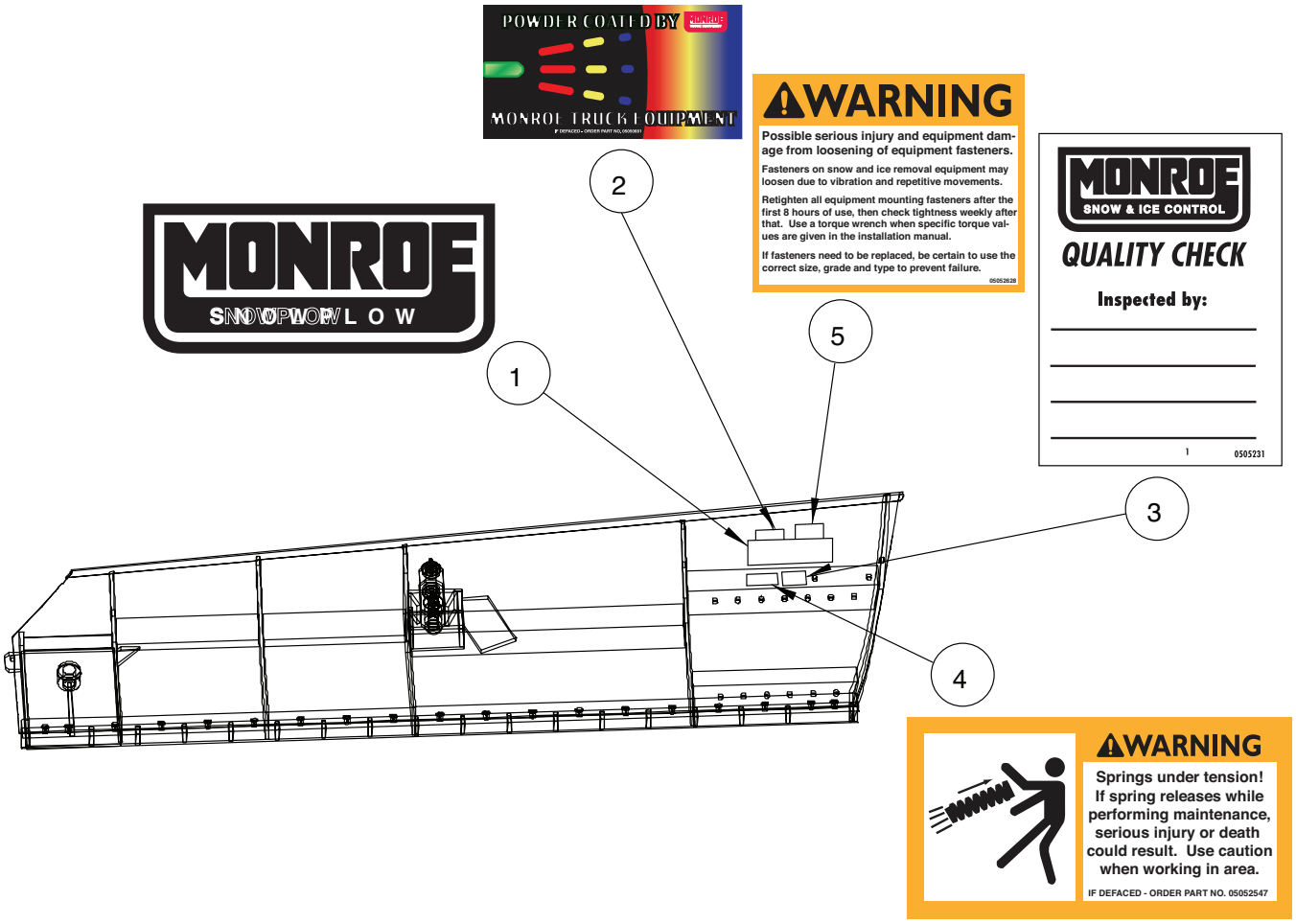

00055962 DECAL KIT, PLOW			
Item	Qty.	Part Number	Description
1	1	05051507	DECAL,MONROE SNOWPLOW,12x5
2	1	05050681	DECAL,2.5x4.5,BONDED POWDER
3	1	05052311	DECAL,QUALITY CHECK
4	1	05052547	DECAL,WARNING SPRINGS UNDER TENSION
5	1	05052628	DECAL,WARNING,TIGHTEN FASTENERS

CUTTING EDGE KITS, NON TRIP

00049751 CUTTING EDGE KIT, 9', .625 X 8, TPCS			
ITEM	QTY	PART NUMBER	DESCRIPTION
1	1	05031076	CUTTING EDGE,.625x8x9',1084
2	11	05014551	BOLT .625-11 x 2.50 G8 DH PLN
3	11	05021383	WASHER .625 LOCK HVY ZC
4	11	05020270	NUT .625-11 G8 HEX ZC

00049752 CUTTING EDGE KIT, 10', .625 X 8, TPCSK			
ITEM	QTY	PART NUMBER	DESCRIPTION
1	1	05031012	CUTTING EDGE,.625x8x10',1084
2	12	05014551	BOLT .625-11 x 2.50 G8 DH PLN
3	12	05021383	WASHER .625 LOCK HVY ZC
4	12	05020270	NUT .625-11 G8 HEX ZC

00049753 CUTTING EDGE KIT, 11', .625 X 8, TPCSK			
ITEM	QTY	PART NUMBER	DESCRIPTION
1	1	05031013	CUTTING EDGE,.625x8x11',1084
2	13	05014551	BOLT .625-11 x 2.50 G8 DH PLN
3	13	05021383	WASHER .625 LOCK HVY ZC
4	13	05020270	NUT .625-11 G8 HEX ZC

00049754 CUTTING EDGE KIT, 12', .625 X 8, TPSC			
ITEM	QTY	PART NUMBER	DESCRIPTION
1	1	05031014	CUTTING EDGE,.625x8x12',1084
2	14	05014551	BOLT .625-11 x 2.50 G8 DH PLN
3	14	05021383	WASHER .625 LOCK HVY ZC
4	14	05020270	NUT .625-11 G8 HEX ZC

CUTTING EDGE KITS, NON TRIP, CARBIDE

00057619 CUTTING EDGE KIT, 9', .750 X 6, CARBIDE, 1.5 GL			
ITEM	QTY	PART NUMBER	DESCRIPTION
1	3	05031082	CUTTING EDGE,.75x6x3',1020,CBD
2	11	05014555	BOLT .625-11 x 3.50 DH PLN
3	11	05021383	WASHER .625 LOCK HVY ZC
4	11	05020270	NUT .625-11 G8 HEX ZC
5	1	05031033	CUTTING EDGE,.5x6x9',TPCS

00057620 CUTTING EDGE KIT, 10', .750 X 6, CARBIDE, 1.5 GL			
ITEM	QTY	PART NUMBER	DESCRIPTION
1	1	05031083	CUTTING EDGE,.75x6x4',1020,CBD
2	2	05031082	CUTTING EDGE,.75x6x3',1020,CBD
3	12	05014555	BOLT .625-11 x 3.50 DH PLN
4	12	05021383	WASHER .625 LOCK HVY ZC
5	12	05020270	NUT .625-11 G8 HEX ZC
6	1	05031030	CUTTING EDGE,.5x6x10',1084,

00057621 CUTTING EDGE KIT, 11', .750 X 6, CARBIDE, 1.5 GL			
ITEM	QTY	PART NUMBER	DESCRIPTION
1	2	05031083	CUTTING EDGE,.75x6x4',1020,CBD
2	1	05031082	CUTTING EDGE,.75x6x3',1020,CBD
3	13	05014555	BOLT .625-11 x 3.50 DH PLN
4	13	05021383	WASHER .625 LOCK HVY ZC
5	13	05020270	NUT .625-11 G8 HEX ZC
6	1	05031031	CUTTING EDGE,.5x6x11',1084,

00057622 CUTTING EDGE KIT, 12', .750 X 6, CARBIDE, 1.5 GL			
ITEM	QTY	PART NUMBER	DESCRIPTION
1	3	05031083	CUTTING EDGE,.75x6x4',1020,CBD
2	14	05014555	BOLT .625-11 x 3.50 DH PLN
3	18	05021383	WASHER .625 LOCK HVY ZC
4	18	05020270	NUT .625-11 G8 HEX ZC
5	1	05031032	CUTTING EDGE,.5x6x12',1084,
6	4	05014553	BOLT .625-11 x 3.00 DH PLN

CUTTING EDGE KITS, TRIP EDGE

00061142 CUTTING EDGE KIT, 9', .625 X 8, TE MOLDBOARD			
ITEM	QTY	PART NUMBER	DESCRIPTION
1	1	05031071	CUTTING EDGE,.625x8x5',1084,
2	1	05031070	CUTTING EDGE,.625x8x4',1084,
3	13	05014551	BOLT .625-11 x 2.50 DH PLN
4	13	05021383	WASHER .625 LOCK HVY ZC
5	13	05020270	NUT .625-11 G8 HEX ZC

00061143 CUTTING EDGE KIT, 10', .625 X 8, TE MOLDBOARD			
ITEM	QTY	PART NUMBER	DESCRIPTION
1	2	05031071	CUTTING EDGE,.625x8x5',1084
2	14	05014551	BOLT .625-11 x 2.50 G8 DH PLN
3	14	05021383	WASHER .625 LOCK HVY ZC
4	14	05020270	NUT .625-11 G8 HEX ZC

00061144 CUTTING EDGE KIT, 11', .625 X 8, TE MOLDBOARD			
ITEM	QTY	PART NUMBER	DESCRIPTION
1	1	05031072	CUTTING EDGE,.625x8x6',1084
2	1	05031071	CUTTING EDGE,.625x8x5',1084,
3	15	05014551	BOLT .625-11 x 2.50 DH PLN
4	15	05021383	WASHER .625 LOCK HVY ZC
5	15	05020270	NUT .625-11 G8 HEX ZC

00061145 CUTTING EDGE KIT, 12', .625 X 8, TE MOLDBOARD			
ITEM	QTY	PART NUMBER	DESCRIPTION
1	2	05031072	CUTTING EDGE,.625x8x6',1084
2	16	05014551	BOLT .625-11 x 2.50 DH PLN
3	16	05021383	WASHER .625 LOCK HVY ZC
4	16	05020270	NUT .625-11 G8 HEX ZC

CUTTING EDGE KITS, TRIP EDGE, CARBIDE

00057626 CUTTING EDGE KIT, 9', .750 X 6, CARBIDE, 1.5 GL, TE			
ITEM	QTY	PART NUMBER	DESCRIPTION
1	1	05031083	CUTTING EDGE,.75x6x4',1020,CBD
2	1	05031084	CUTTING EDGE,.75x6x5',CBD,1.5
3	13	05014555	BOLT .625-11 x 3.50 DH PLN
4	13	05021383	WASHER .625 LOCK HVY ZC
5	13	05020270	NUT .625-11 G8 HEX ZC
6	1	05031091	CUTTING EDGE,.5x6x5',TPCS
7	1	05031009	CUTTING EDGE,.5x6x4',1084,

00057627 CUTTING EDGE KIT, 10', .750 X 6, CARBIDE, 1.5 GL, TE			
ITEM	QTY	PART NUMBER	DESCRIPTION
1	2	05031084	CUTTING EDGE,.75x6x5',CBD,1.5
2	14	05014555	BOLT .625-11 x 3.50 DH PLN
3	14	05021383	WASHER .625 LOCK HVY ZC
4	14	05020270	NUT .625-11 G8 HEX ZC
5	2	05031091	CUTTING EDGE,.5x6x5',TPCS

00057628 CUTTING EDGE KIT, 11', .750 X 6, CARBIDE, 1.5 GL, TE			
ITEM	QTY	PART NUMBER	DESCRIPTION
1	1	05031084	CUTTING EDGE,.75x6x5',CBD,1.5
2	2	05031082	CUTTING EDGE,.75x6x3',1020,CBD
3	13	05014555	BOLT .625-11 x 3.50 DH PLN
4	13	05021383	WASHER .625 LOCK HVY ZC
5	13	05020270	NUT .625-11 G8 HEX ZC
6	2	05031008	CUTTING EDGE,.5x6x3',1084,TPCS
7	1	05031091	CUTTING EDGE,.5x6x5',TPCS

00057629 CUTTING EDGE KIT, 12', .750 X 6, CARBIDE, 1.5 GL, TE			
ITEM	QTY	PART NUMBER	DESCRIPTION
1	4	05031082	CUTTING EDGE,.75x6x3',1020,CBD
2	14	05014555	BOLT .625-11 x 3.50 DH PLN
3	14	05021383	WASHER .625 LOCK HVY ZC
4	14	05020270	NUT .625-11 G8 HEX ZC
5	4	05031008	CUTTING EDGE,.5x6x3',1084,TPCS